VIPER®

6.5-20x50 RIFLESCOPE

Viper® 6.5-20x50 Models	
Model	**Features**
VPR-M-06BDC	Dead-Hold® BDC MOA Reticle
VPR-M-06MD	MIL Dot Reticle MOA

Parts

ITEM NO.	PART NUMBER	DESCRIPTION	QTY.	NOTES
1	C-02593-0	Viper elevation turret dial	1	
2	C-02592-0	Viper windage turret dial	1	
3	C-02579-0	Viper turret dial spring	2	Sent together
4	C-02586-0	Viper turret dial screw	2	
5	C-02573-0	Elevation dial label	1	
6	C-02574-0	Windage dial label	1	
7	C-02595-0	Viper elevation cap	1	
8	C-02594-0	Viper windage cap	1	Send with badge C-02521-0

In-Box Accessories

ITEM NO.	PART NUMBER	DESCRIPTION	QTY.	NOTES
	C-01946-0	Bikini style lens cover 50mm	1	
	C-02963-0	Lens Cloth	1	
	M-00142-1	Viper PA owner's manual	1	Included wtih all models
	M-00240-1	Reticle manual Dead-Hold BDC MOA SFP	1	Included with VPR-M-06BDC
	M-00144-1	Reticle manual MIL-Dot MOA	1	Included with VPR-M-06MD

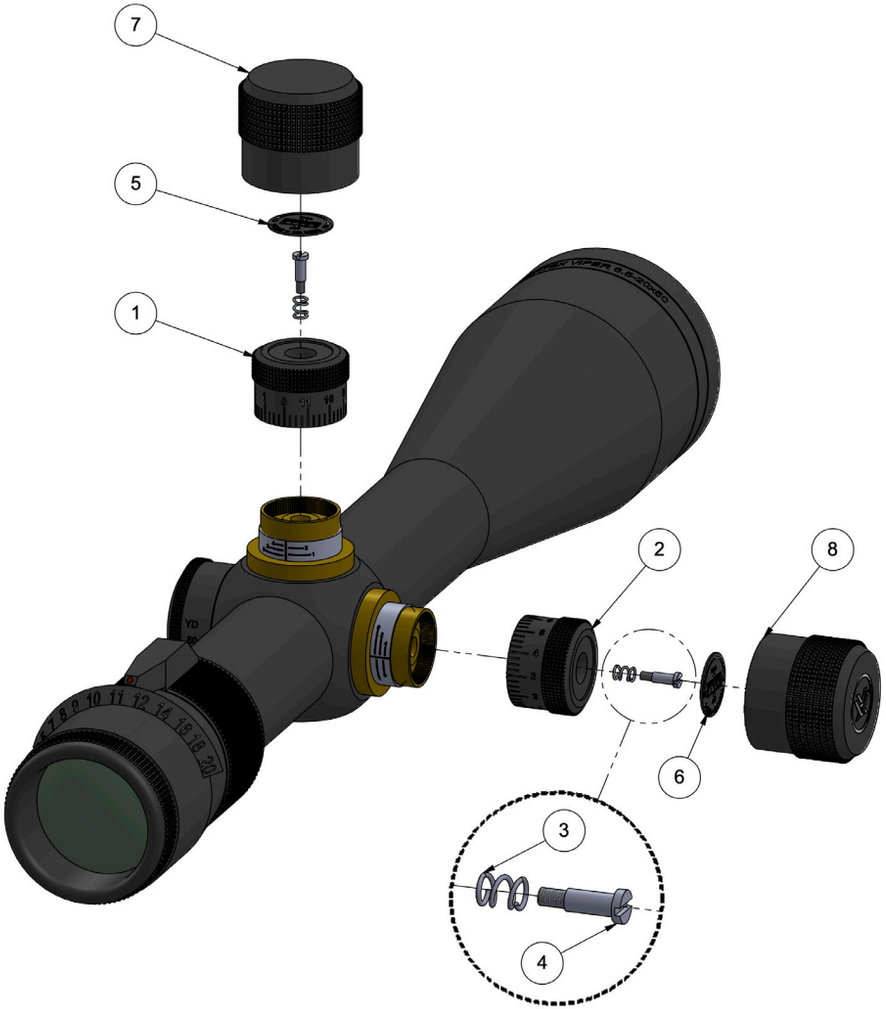

© 2023 Vortex Optics. ® Registered Trademark and TM Trademark of Vortex Optics.