CROSSFIRE® II

SCOUT 2-7x32 RIFLESCOPE

Crossfire® II 2-7x32 Scout Models	
Model	**Features**
CF2-31002	V-Plex MOA Reticle

Parts

ITEM NO.	PART NUMBER	DESCRIPTION	QTY.	NOTES
1	C-02927-0	Windage dial	1	
2	C-02618-0	Elevation dial	1	
3	C-01025-0	Turret dial screw	2	
4	C-01021-0	Elevation turret cap	1	
5	C-01022-0	Windage turret cap	1	Send with C-02521-0

In-Box Accessories

ITEM NO.	PART NUMBER	DESCRIPTION	QTY.	NOTES
	C-02963-0	Lens Cloth	1	
	C-01026-0	Bikini style lens cover 32mm	1	
	M-00214-1	Crossfire rifle scope owner's manual	1	

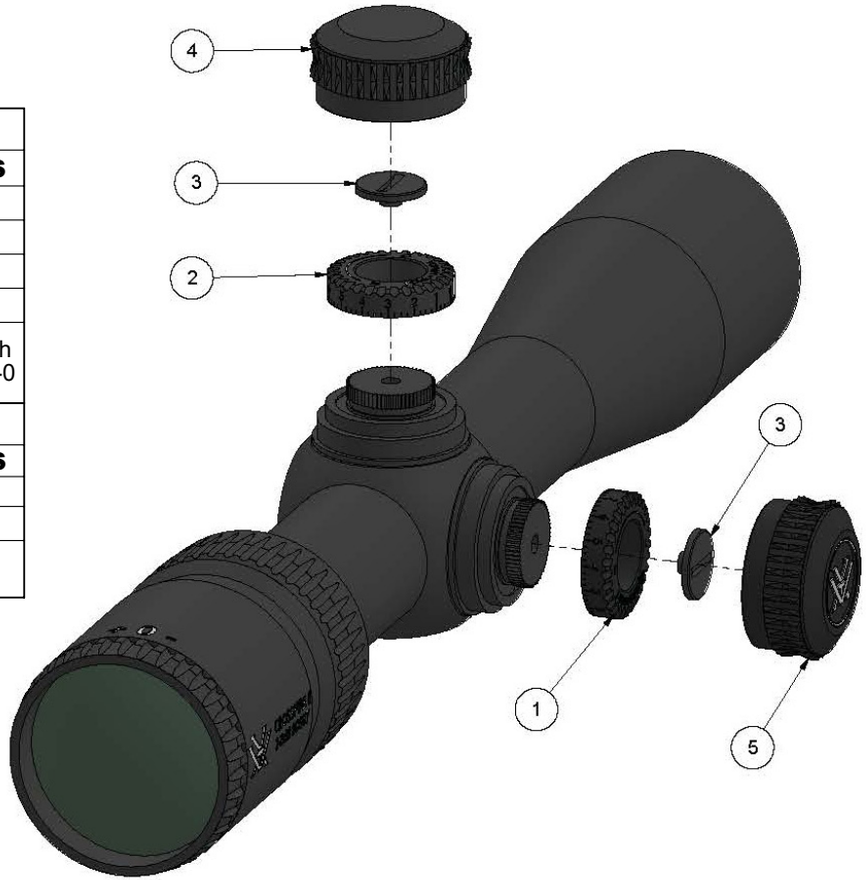

© 2023 Vortex Optics. ® Registered Trademark and TM Trademark of Vortex Optics.